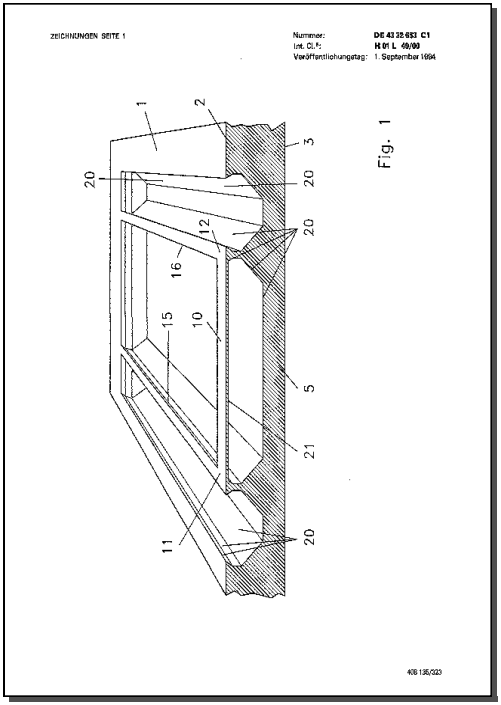

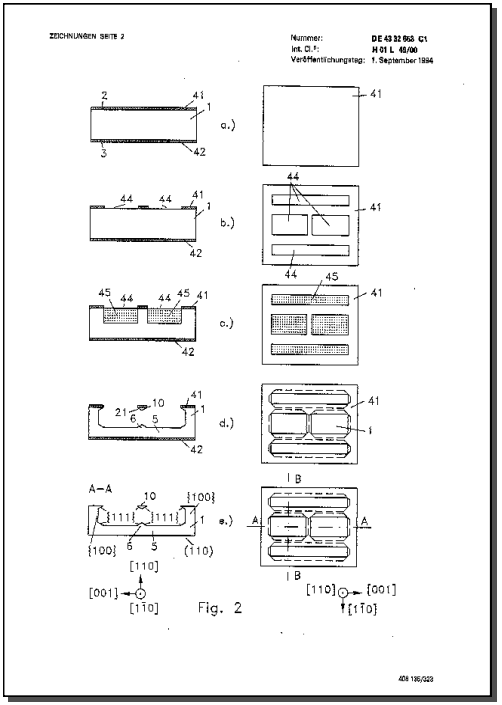

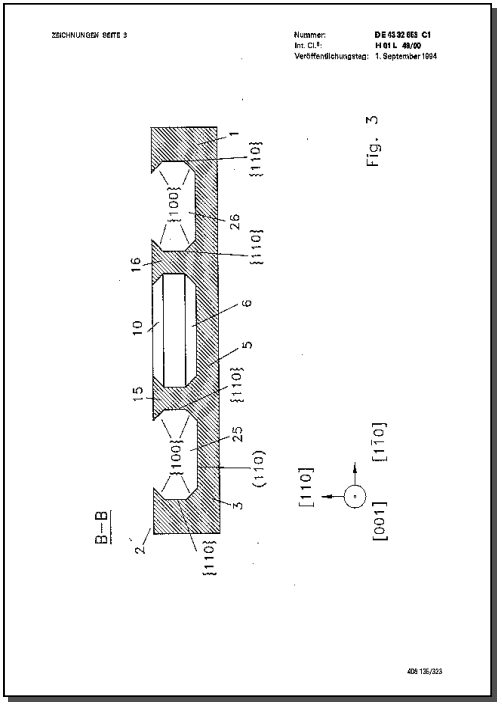
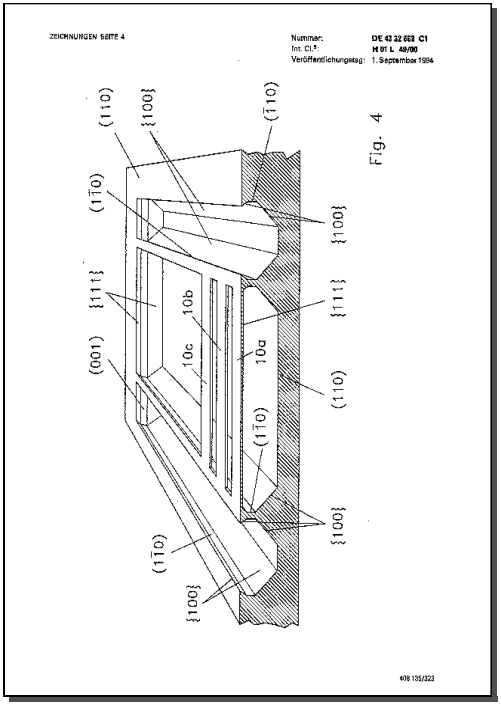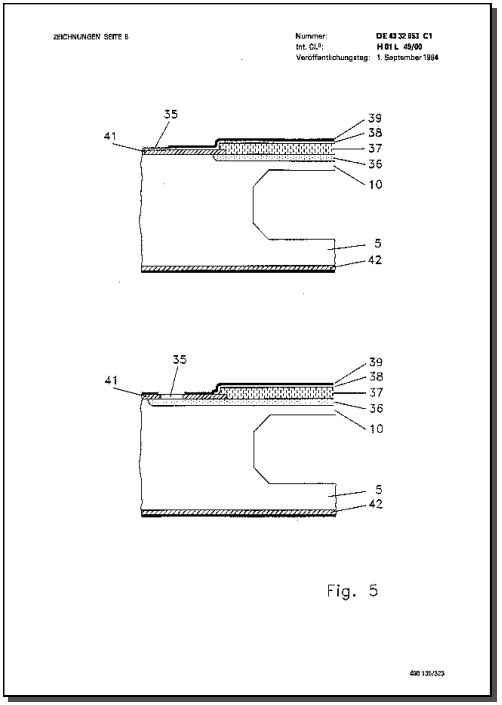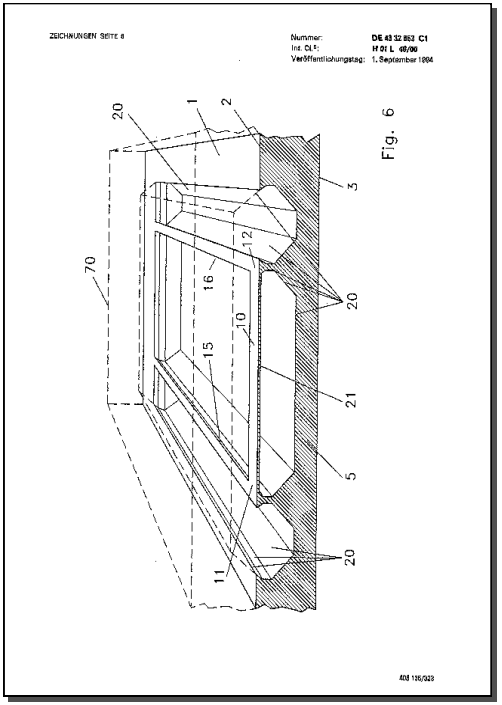
Drawing pages of DE4332653 C1